ECS-0050

Design of capacitive sensors for compliance monitoring in padmapada clubfoot brace

Diwakar R. Shastri, Aravind M. A., Dr. N. S. Dinesh
Indian Institute of Science

***Abstract*—Clubfoot disorder treatment requires use of corrective braces after surgery to prevent it from occurring again. Continuous monitoring of the patient after wearing the brace forms a necessary requirement for successful healing. Padmapada is a recent clubfoot brace that was developed for this purpose. This paper presents the design of Padmapada- a compliance monitoring clubfoot brace using capacitive sensing. The paper discusses the design and development of the sensorand presents results of compliance with experimental data.**

I. Introduction

Clubfoot is a congenital disorder affecting the musculoskeletal system and is found among 2.5 out of 1000 new born children. Those affected by clubfoot show plantarwards(inwards) rotation of foot. Treatment at the earlier stage is performed by using plaster casts. In such cases, the response of the foot is monitored at regular intervals and the casts are changed as required [1]. Another solution is through surgical procedure [2]. In both cases, continuous monitoring is necessary for successful treatment. Use of corrective braces are necessary for children aged 3-5 years in both the cases to prevent the disorder from re-appearing.

A large variety of braces are available in the market [3] including but not limited to Dennis Browne Brace, Dobb's Dynamic Clubfoot Brace, Markell Brace etc. [4][5][6][7]., Though these braces provide the necessary corrective forces required, they do not allow required dorsiflexion [4] to the child to crawl on its knees.

Padmapada©[1]is a clubfoot complaint monitoring brace developed to provide the necessary dorsiflexion [8] as shownin Fig1. The brace provides necessary freedom to move the lower limbs of the child keeping the foot in the desired plantarflex position by use of a 4-bar linkage which allows the child to comfortably crawl on its knees.

During earlystudies, it was reported that parents tend to remove the brace when children started crying due to discomfort.It was also found out that for proper curative process, thefoot should be in proper contact with the insole of the shoe. In order to achieve these purposes, it was necessary to develop a sensor array to check the compliance of wearing of the brace and monitor its wearing pattern.

To achieve wearing compliance foot must be properly touching the insole in the highlighted areas shown in Fig 2a. For the compliance monitoring, the above-mentionedareas are sensed for proper contact and periodic collection of sensed data is stored for future

Fig. 1. Padmapada Clubfoot Brace.

analysis. From literature, many sensing techniques can be used to detect touch activity like resistive, pressure, capacitive etc. Capacitive sensor was selected for Padmapada due to the following reasons.

- Ease of construction
- Vibration proof
- Simple and compact construction
- Cost effective solution

Fig. 2. 2a Area to be sensed [Image source: Google Images]; 2b Sensor Layout.

Fig 2b shows the placement of the capacitive sensors corresponding to the area to be detected. It consists of three capacitive sensors which are placed at 1 metatarsal, 5 metatarsal and heel locations.

This paper presents the design of the capacitive sensors for compliance monitoring. The paper also presents overall system design which stores data periodically. The data is presented to the doctor by means of a GUI developed on Windows platform.

[1] Patented

II. System Design

The compliance monitoring for the clubfoot brace is necessary as parents tend to remove the brace as child starts crying due to discomfort. Therefore, compliance monitoring is done only during the initial phase, until the child gets accustomed to the brace. This duration is found to be approximately three months. Hence, it was necessary to design a low power system that required a low power microcontroller for this purpose.

The conceptual block diagram of the system is shown in Fig.3. The heart of the system is the KL05Z, an ARM Cortex M0 microcontroller from Freescale. It has inbuilt low-power touch sense interface for interfacing capacitive sensor, Real-Time-Clock, also supports very low-power stop (VLPS) mode, very low-power run (VLPR) mode. In VLPR mode, the controller consumes

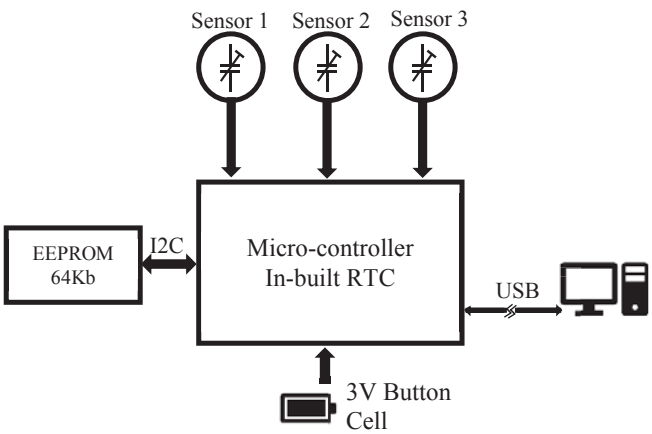

Fig. 3. System Block Diagram.

a maximum of 313µA whereas in VLPS mode, the controller consumes a maximum of 0.45µA. The microcontroller is configured to wake up from VLPS mode every one hour and operates in VLPR mode to process the sensor data and returns back to VLPS mode. A 64Kb EEPROM is interfaced to the system via I2C interface to store the compliance monitoring data. The data stored in the EEPROM is communicated to the computer via USB interface. A 3V non-rechargeable button battery CR2032, is used to power the system.

III. CapacitiveSensor Design for Foot Sensing

Capacitive sensing works on the principle of detection of change in dielectric or change in physical parameters like area of electrodes or gap between the electrodes. Foot presence sensing can be approximated to change in dielectric constant between the electrodes.

A comb structured capacitor design is selected for the present application [9] [10]. In order to eliminate the noise due to stray capacitance, a shield is provided around the capacitor pattern as shown in Fig.4.

In a comb-capacitor, the electrodes each having an area A, are in the same plane separated by a distance d. This configuration is called as parallel-finger

Fig. 4. Central Sensor Symmetry.

configuration. Capacitance for such a structure is given by (1).

$$C = \frac{\varepsilon_0 \varepsilon_r (n-1) A}{d} \quad (1)$$

Where, n is the number of electrodes. For the above capacitive sensor, n =9 and relative permittivity for FR4 material ε_0=4.4.

The theoretical value of capacitance based on equation was found to be 3.73pF. The practically measured capacitance of the sensor in Fig.4, by means of a LCR

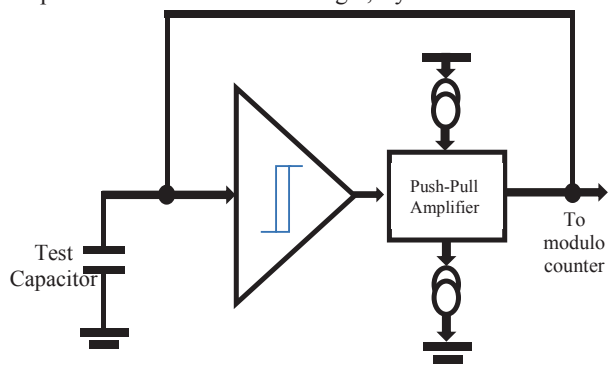

Fig. 5. Electrode Oscillator Circuit.

meter was found to be 3.4pF.

In Padmapada, the capacitance is measured by the microcontroller which consists of an electrode oscillator circuit as shown in Fig.5, to pump charges to the sensors using constant current source. A timer counter detects the time it takes for the capacitor to charge to a known voltage value. The measured time is proportional to capacitance [11]. The microcontroller internally converts the time to equivalent digital counts. The count value is converted to actual capacitance using the (2).

$$C_{elect} = Count * C_{cc} \quad (2)$$

Where, C_{cc} is the count conversion coefficient given by (3).

$$C_{cc} = \frac{C_{ref} * I_{elect}}{I_{ref} * Prescalar * NSCN} \quad (3)$$

Where, C_{ref} is found to be 1pF from datasheet of the microcontroller and other parameters are user programmable and are set to provide optimum measurements as follows:

$$I_{elect} = 8\mu A\,, Prescalar = 16\,,$$
$$NSCN = 12\,, I_{ref} = 32\mu A$$

	Sensor 1		Sensor 2		Sensor 3	
	Absence of Foot	Presence of Foot	Absence of Foot	Presence of Foot	Absence of Foot	Presence of Foot
Micro-Controller Count Value	2617	2796	2331	2528	2256	2390
Capacitance Value (pF)	3.41	3.64	3.04	3.29	2.94	3.11

Table 1 SAMPLE CAPACITANCE VALUES

Table 1 shows a sample data set of count values obtained from the micro-controller for all the 3 sensors and their corresponding capacitance values.

IV. System Functioning

During the usage of the brace, sensor capacitance is measured without the presence of foot and the value is stored as base capacitance. With respect to the base capacitance, values of capacitance in the presence of foot are compared and if found to be greater than a pre-determined threshold, the compliance is asserted.

a. Calculation of Threshold

The raw sensor data consisting of capacitance values in terms of timer counter at each of the sensors are initially collected in the experimental phase from many clinical trials. Based on the overall average change in capacitance when foot is present and absent, a threshold value is calculated as given in (4).

$$\mathcal{C}_{T_0}(i) = \left(C_{max}(i) - C_{min}(i)\right) * 0.5 \quad (4)$$

Where $\mathcal{C}_{T_0}(i)$ is the capacitance threshold value for each of the three sensors at position i for $i = 1,2,3$ and $C(i)$ is a vector array of experimentally collected values of sensor capacitance at position i consisting of values from the absence to the presence of foot. $C_{max}(i)$ and $C_{min}(i)$ are the maximum and minimum values.

The threshold calculated from data set acts as a decider value for detecting compliance of the brace.

b. Compliance Monitoring

During the first visit to the doctor, the device is configured by using the GUI and the base capacitance values of each of the sensor, when the child is not wearing the brace, are recorded. These values are the $C_{base}(i)$. The threshold value $\mathcal{C}_{T_0}(i)$ is added to the $C_{base}(i)$ to obtain the respective threshold for the sensor $C_T(i)$ as given by (5).

$$C_T(i) = C_{base}(i) + \mathcal{C}_{T_0}(i) \quad (5)$$

The doctor then uses the GUI to start the data acquisition procedure. The device is configured to wake up every one hour and monitor the compliance by comparing the measured value of capacitance of the sensor at that instance with respect to the threshold set for each of the sensors respectively. If the measured value of capacitance is greater than the threshold, for at least two of the three sensors, it is concluded as compliant else non-compliant. This periodically acquired data is recorded in an on-board flash memory and presented to the doctor in the form of graphs when the patient returns for a check-up.

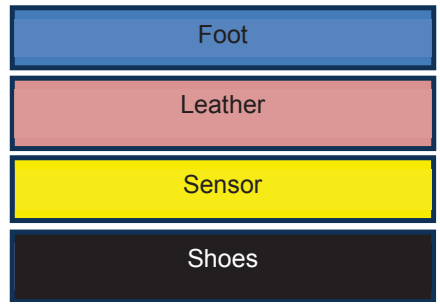

Fig. 6. Hierarchy of construction of brace.

V. Additional Challenges

During initial clinical trials, it was found that the electronics was getting corroded due to frequent urination and perspiration of the feet. To protect the electronics from corrosion, two layers of acrylic coat was sprayed on to both sides of electronics and the complete electronics on the solder side was sealed with acrylic enclosure (cut in the shape of the PCB) using silicone RTV as adhesive on the sides and vinyl was

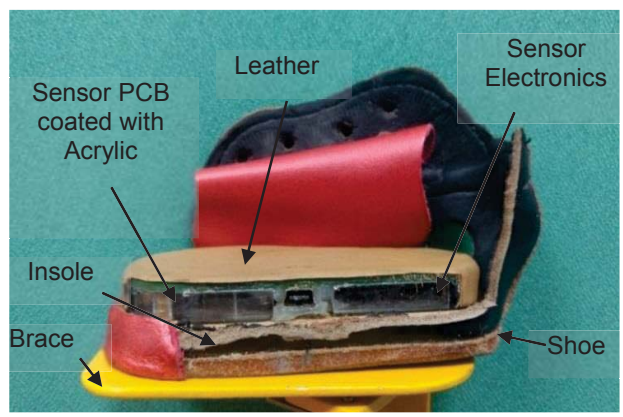

Fig. 7. Cross-sectional View of actual construction.

pasted on the walls enclosing the solder side of the PCB with the battery embedded in it to make it water proof. The micro-USB port was protected using a micro-USB dust cover. The electronics on the sensor side was covered with a layer of leather to provide cushioning to the baby feet. The conceptual cross section of the layered construction of the brace is as shown in Fig.6.

Fig 7 shows the cross-sectional view depicting various layers in actual construction.

Further, due to perspiration of the foot and unavoidable frequent urination, the leather accumulates moisture and gets wet. This dampness alters the dielectric property of the leather and results in variation of capacitance value giving rise to false positive results. In order to limit the variation of capacitance due to

dampness, the leather was replaced with Rexine which is a water proof material.

VI. RESULTS

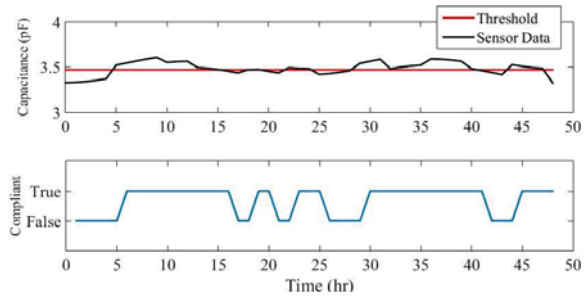

Fig. 8. Detection of Presence of Foot using threshold.

The Fig 8 shows experimental data samples of one sensor (1-Metatarsal) of right foot collected from a child wearing a brace for a period of 48 hours. It also shows threshold value which was recorded during the calibration phase by the doctor before fixing the brace on the child. The variation of capacitance is compared

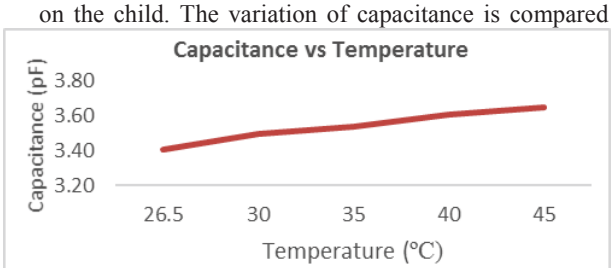

Fig. 9. Capacitance vs Temperature.

against the pre-determined fixed threshold. If the capacitance is greater than the threshold, the hour is marked as

compliant as shown in the subplot.

It can be seen from the graph in Fig 8 that the curve between 5th and 10th hour, although the brace is put properly, the capacitance is varying instead of being flat. This variation is found to be due to temperature. A separate lab test was conducted to confirm the same and from Fig 9, it can be seen that the capacitance varies with change in temperature. Fig 10 shows the variation of capacitance over 48 hours. This change in capacitance due to temperature alone and not due to wearing of brace might give rise to false positive at certain point. For example, between 16th and 21st hour, it could be that the brace is removed and shelfed, but as the capacitance is just above the threshold line and therefore assumed to be compliant.

The falling peaks between 13th and 16th hour and also 38th and 43rd hour clearly indicate that the brace was removed due to large variation of capacitance value and hence, non-compliant. Since the sampling is done every one hour, the non-compliance in this case is assumed for the entire hour.

Fig 8 shows a small dip in the value between 8th and 13th hour. This case arises when the shoe becomes loose or shoes not put properly. The shoes tend to get loosened as children tend to kick in order to get rid of the brace due to discomfort. This situation arises frequently and parents should ensure to tighten the shoe as and when necessary.

It can be seen that, compliance monitoring is done fairly well over the span of 48 hours by using a simple threshold and the doctor can interpret the number of hours the child has worn the brace and suggest suitable remedies. The raw sensor data is also presented to the doctor to verify if any spurious spikes were introduced in the measurement of the sensors due to previously unknown factors. The doctor can then take a decision to judge the compliance of the braces.

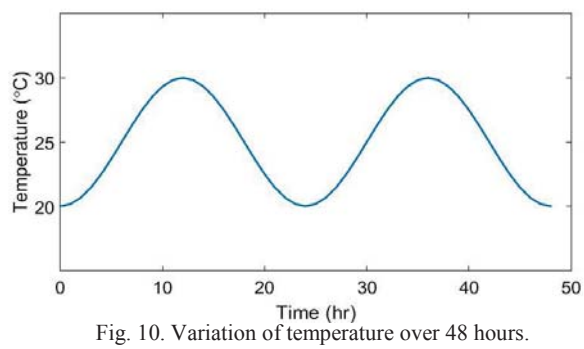

Fig. 10. Variation of temperature over 48 hours.

VII. CONCLUSION

Clubfoot is a congenital disorder which requires use of corrective brace after surgery. Padmapada was one such brace developed for this purpose to also provide continuous monitoring. Capacitive sensor based monitoring system was successfully developed and it is accurately able to monitor the presence of foot.

REFERENCES

[1] Changulani, M., Garg, N. K., Rajagopal, T. S., Bass, A., Nayagam, S. N., Sampath, J., & Bruce, C. E. (2006). Treatment of idiopathic club foot using the Ponseti method. Bone & Joint Journal,88-B(10), 1385-1387.

[2] Anand, Ashish, and Debra A Sala. "Clubfoot: Etiology and Treatment." Indian Journal of Orthopaedics 42.1 (2008): 22–28. PMC. Web. 29 Aug. 2017

[3] Desai, L., Oprescu, F., DiMeo, A., Morcuende, J.A.: Bracing in the treatment of children withclubfoot: past, present, and future. Iowa Orthop. J. 30, 15–23 (2010)

[4] Desai, Lajja et al. "BRACING IN THE TREATMENT OF CHILDREN WITH CLUBFOOT: PAST, PRESENT, AND FUTURE." The Iowa Orthopaedic Journal30 (2010): 15–23. Print.

[5] Yamamoto, H., Furuya, K.: Treatment of congenital clubfoot with a modified Denis Brownesplint. J. Bone Joint Surg. 72-B(3), 460–463 (1990).

[6] Garg, S., Porter, K.: Improved bracing compliance in children with clubfeet using a dynamicorthosis. J. Child. Orthop. 3(4), 271–276 (2009)

[7] Dobbs, M.B., Gurnett, C.A.: Update on clubfoot: etiology and treatment. Clin. Orthopaed.Relat. Res. 467(5), 1146–1153 (2009)
[8] Kammardi, Pradyumna K., et al. "Compliance Monitored Clubfoot Brace "PADMAPADA"©." ICoRD'15–Research into Design Across Boundaries Volume 2. Springer, New Delhi, 2015. 559-568
[9] http://www.ti.com/lit/an/snoa928/snoa928.pdf
[10] http://www.ti.com/lit/an/snoa928/snoa927.pdf
[11] http://www.nxp.com/docs/en/referencemanual/KL05P48M48S.f